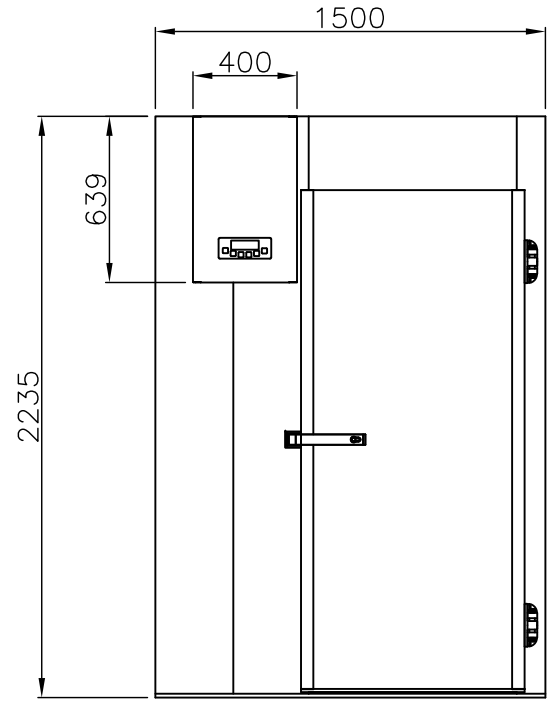

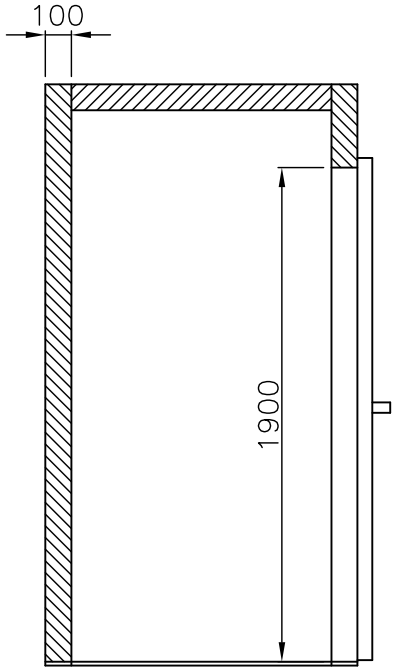

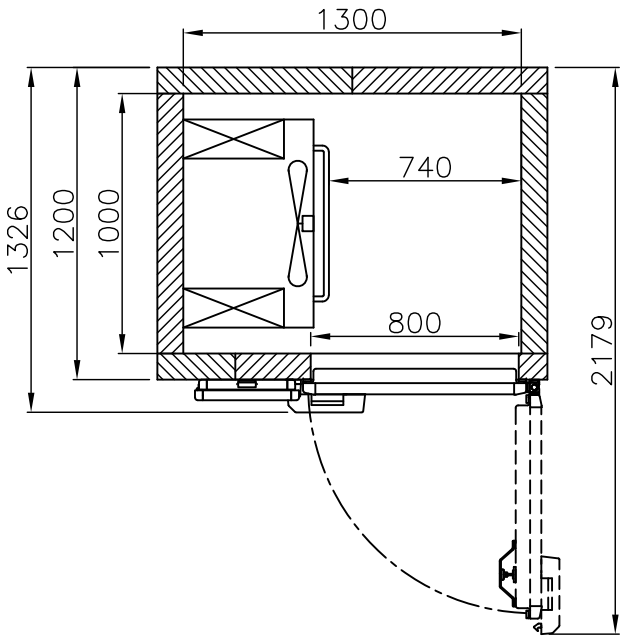

Revision					Inspection / important Dimension marked with X.XX	
Description. Måltabel KPS 120 uden gulv					General tolerance: ISO 2768-m : ISO 286-2	
Gram Commercial A/S VOJENS DENMARK	Date	Sign.	Sheetsize	Drawing no.	Sheet no.	Rev.
	30-06-2006	JABP	3	765041160	1 of 1	001

All rights to this drawing belongs to Gram Commercial A/S, cf. law of Copyright. Thus the drawing should notwithout our written permission be copied, presented or passed over to a third person. Misuse will lead to prosecution.