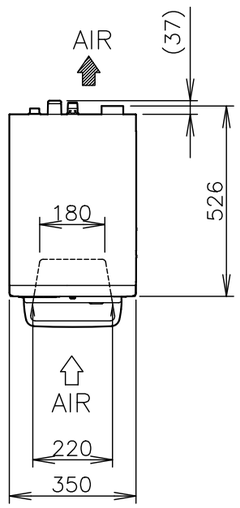

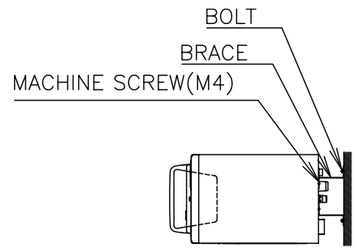

OPTIONAL

SAFETY BRACKET INSTALLATION(WALL MOUNTING)

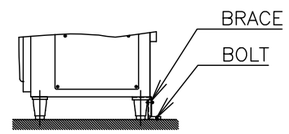

OPTIONAL
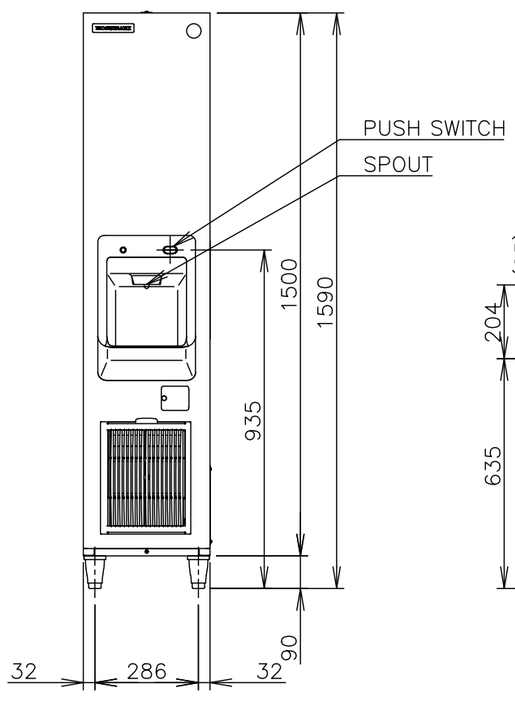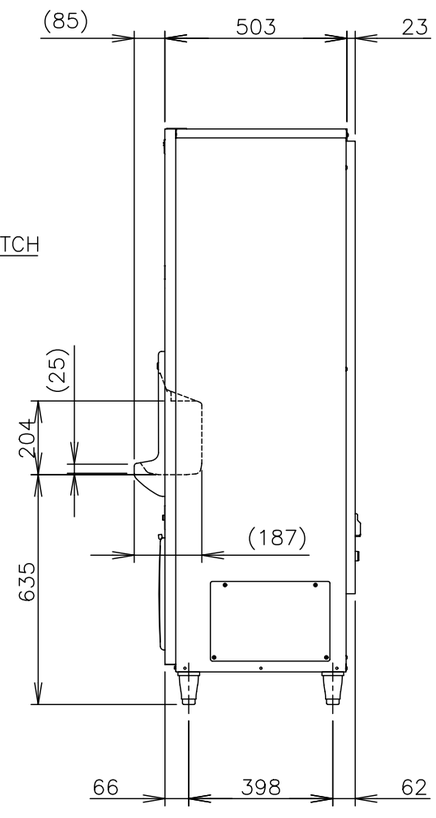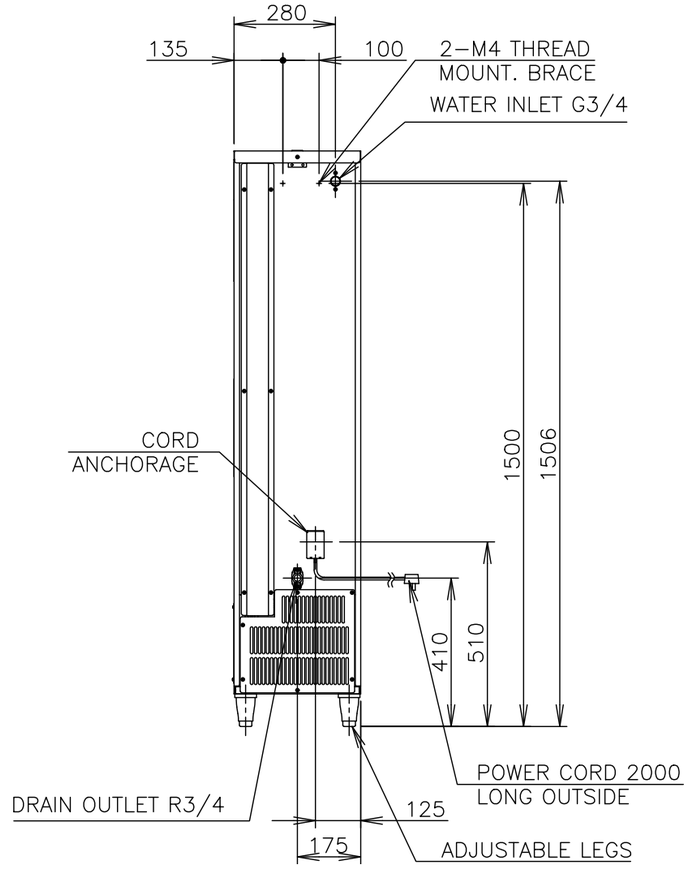
SAFETY BRACKET INSTALLATION(FLOOR MOUNTING)