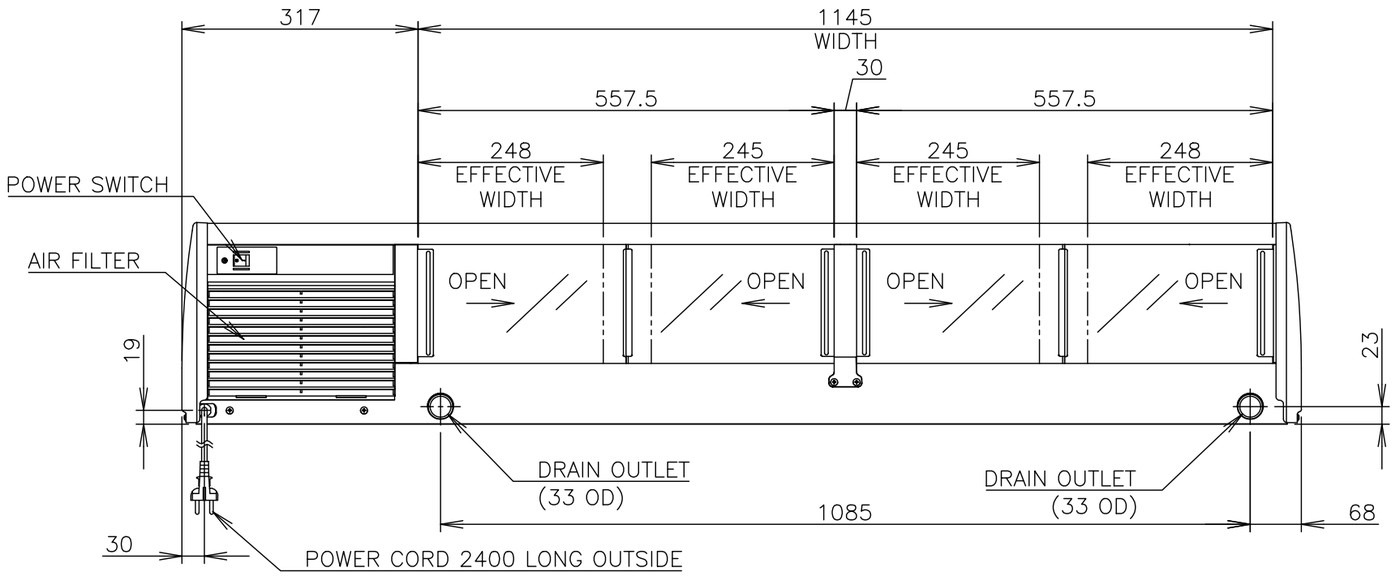


VIEW A(REAR)

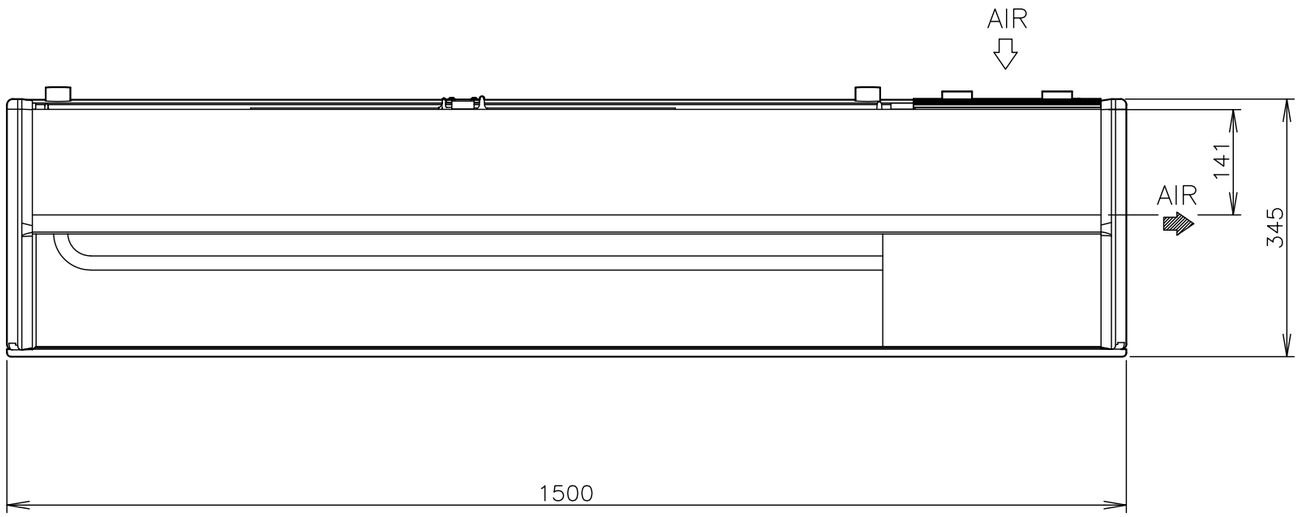


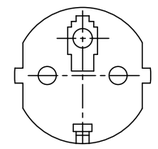

PLUG SHAPE

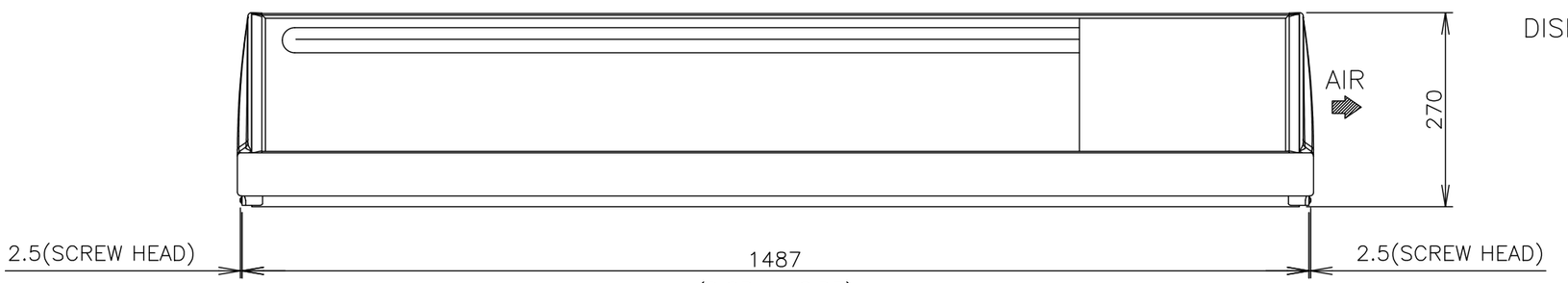


(DISPLAY SIDE)

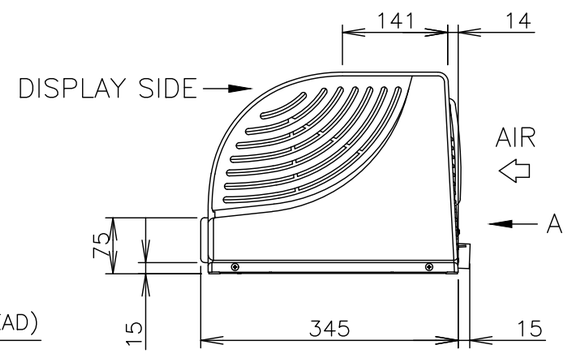


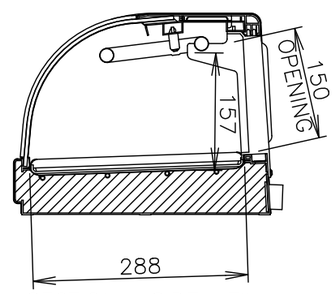


SECTIONAL SIDE VIEW