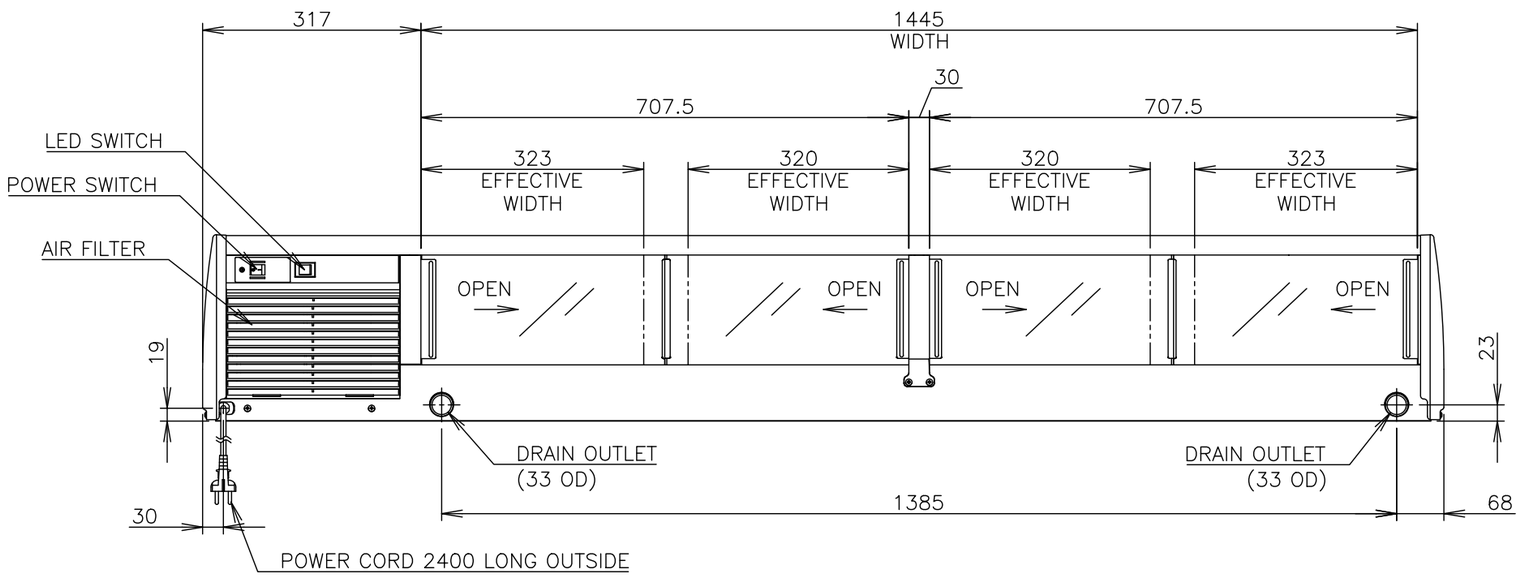

VIEW A(REAR)

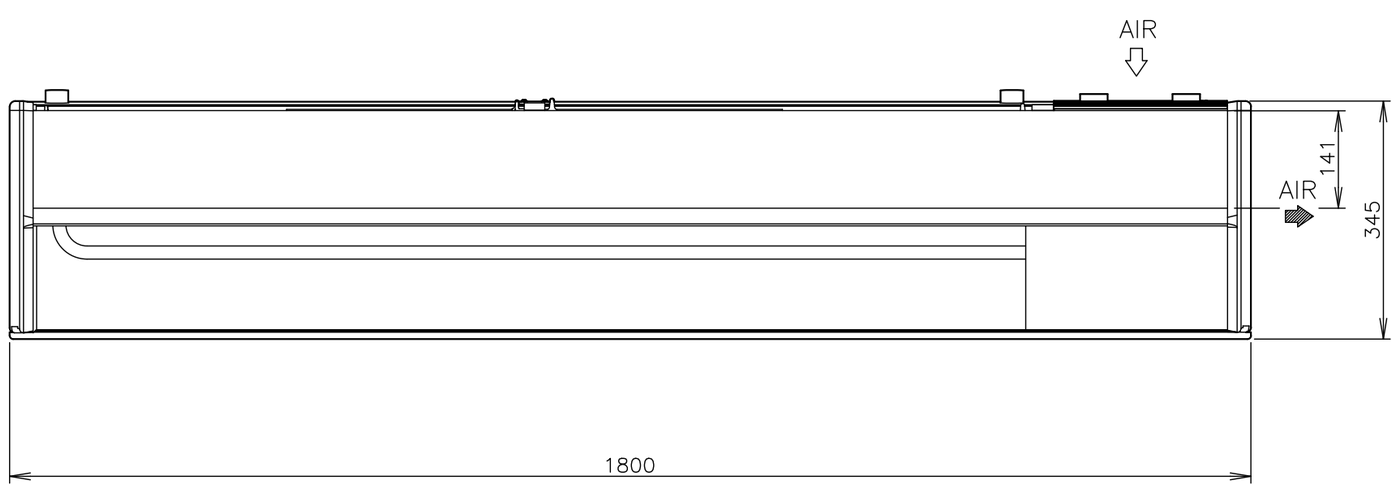

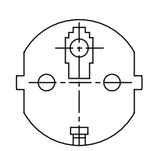

PLUG SHAPE

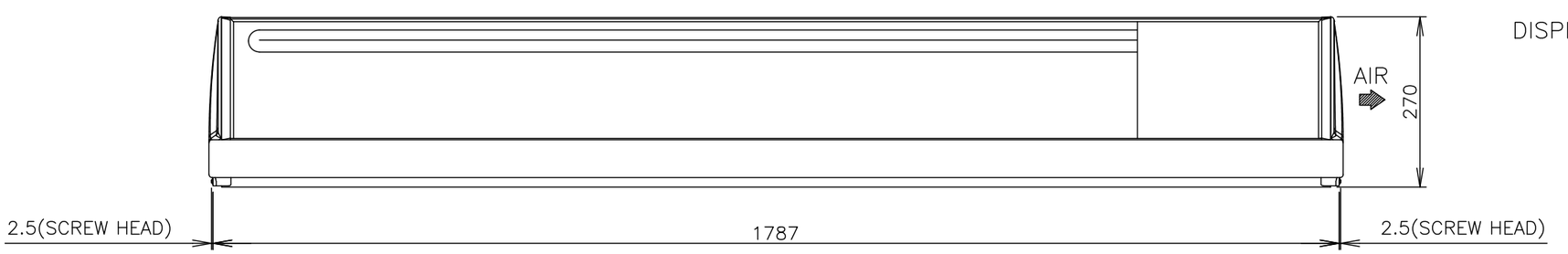

(DISPLAY SIDE)

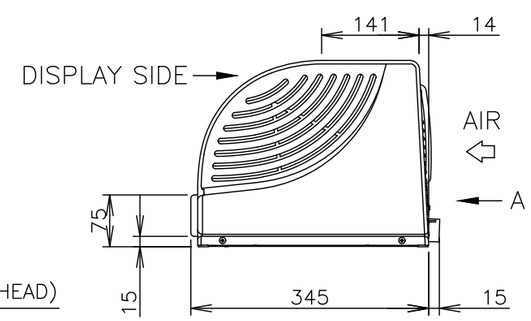

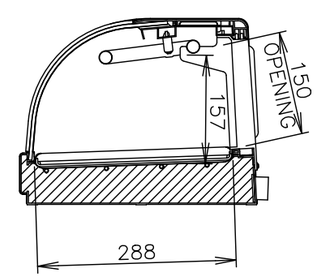

SECTIONAL SIDE VIEW