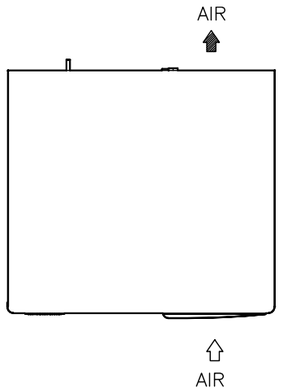
AIR
AIR

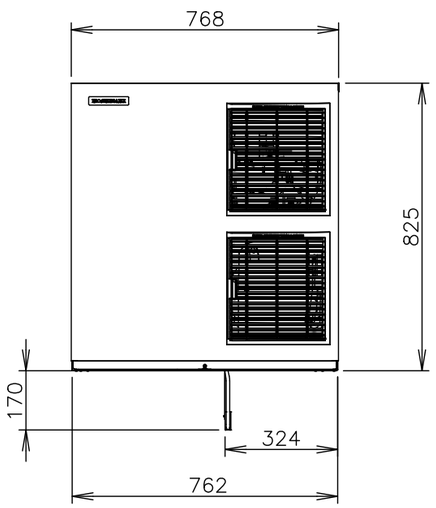
768
825
170
324
762

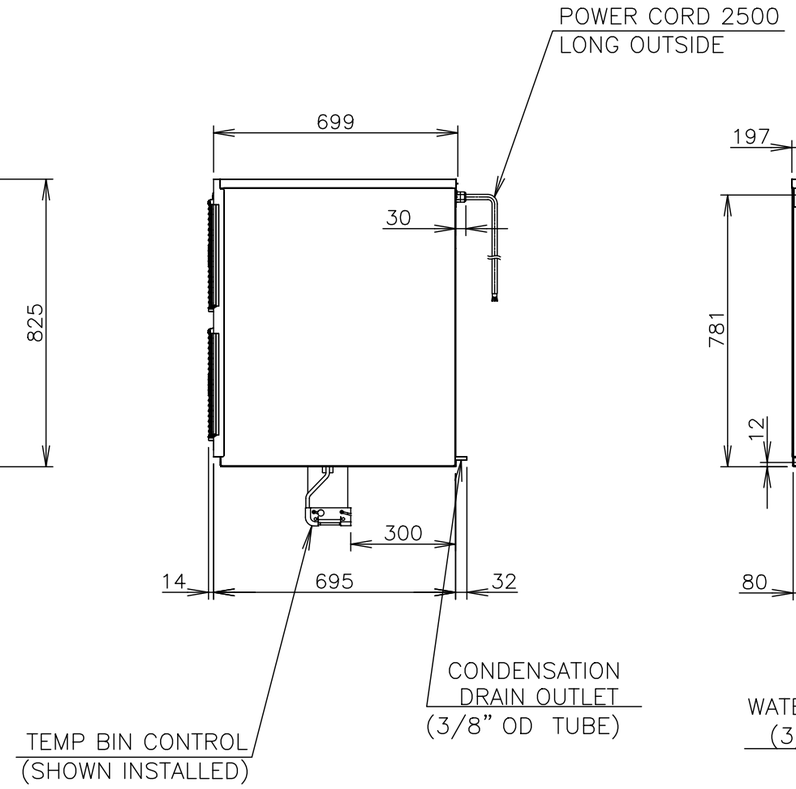
POWER CORD 2500
LONG OUTSIDE
699
30
300
14
695
32
CONDENSATION
DRAIN OUTLET
(3/8" OD TUBE)
TEMP BIN CONTROL
(SHOWN INSTALLED)

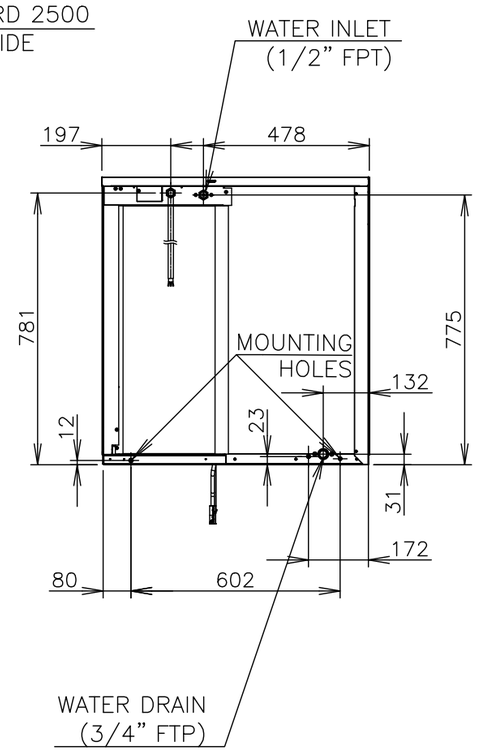
WATER INLET
(1/2" FPT)
197
478
781
775
MOUNTING
HOLES
132
12
23
31
172
80
602
WATER DRAIN
(3/4" FTP)

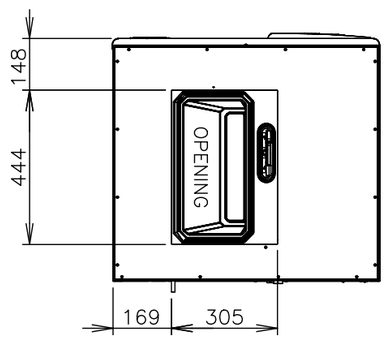
148
444
OPENING
169
305