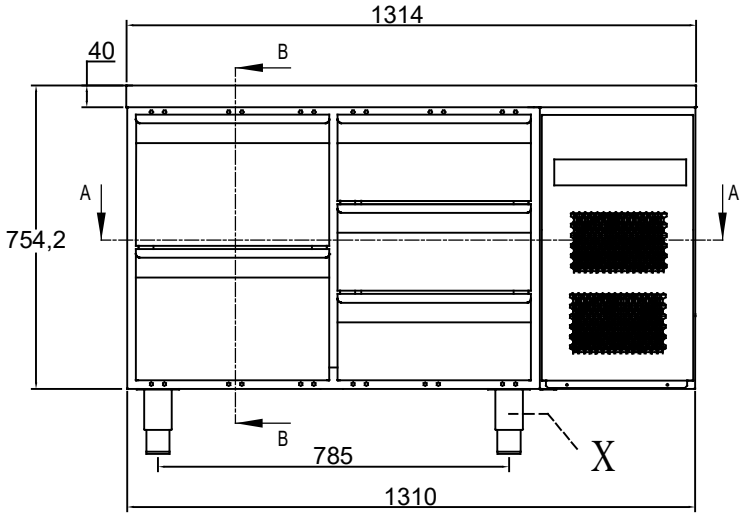

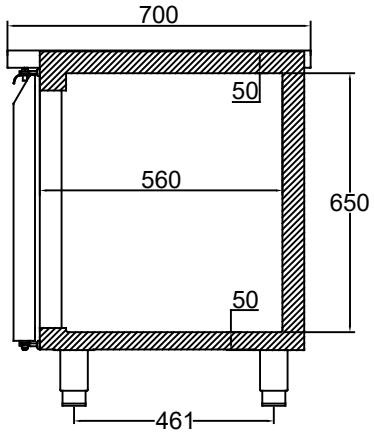

SECTION B-B

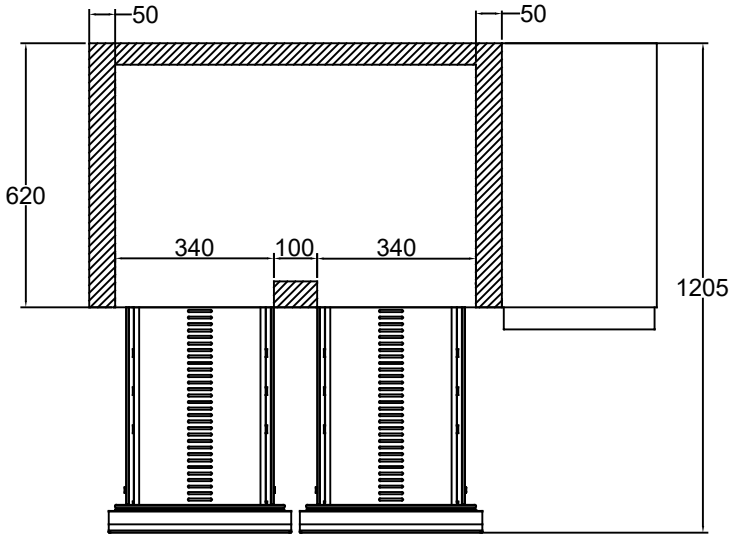

SECTION A-A

OPTIONS (TABLETOP)

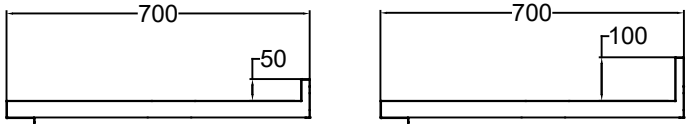

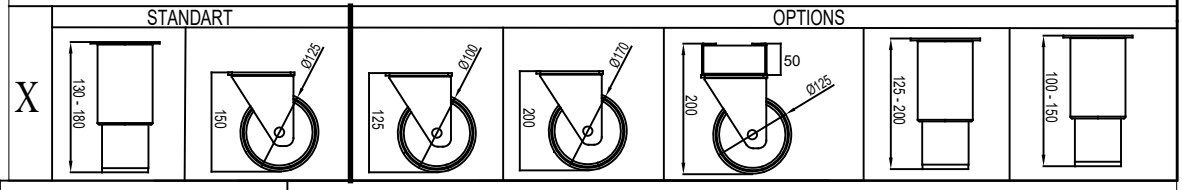

R&D	DATE	GENERAL TOLERANCES	
DRAWN		DIN 7168 M	
CONTROL			
APPROV.			

HOSHIZAKI

DESCRIPTION	PREMIER UNDERCOUNTER 2D MODEL (DRAWERS - FLAT TABLETOP)
DESCRIPTION 2	
DRAWING NO	

REVISION | SCALE 1:1

DO NOT SCALE FROM DRAWING! | ALL DIMENSIONS ARE IN (mm)