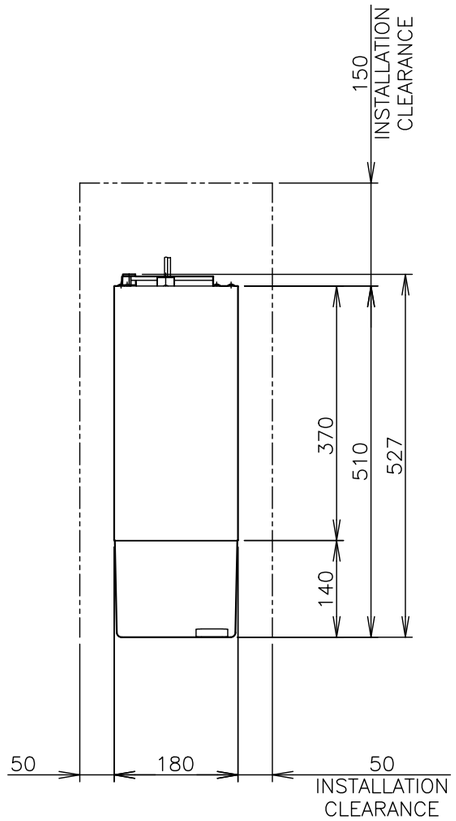
150
INSTALLATION
CLEARANCE
370
510
527
140
50
180
50
INSTALLATION
CLEARANCE

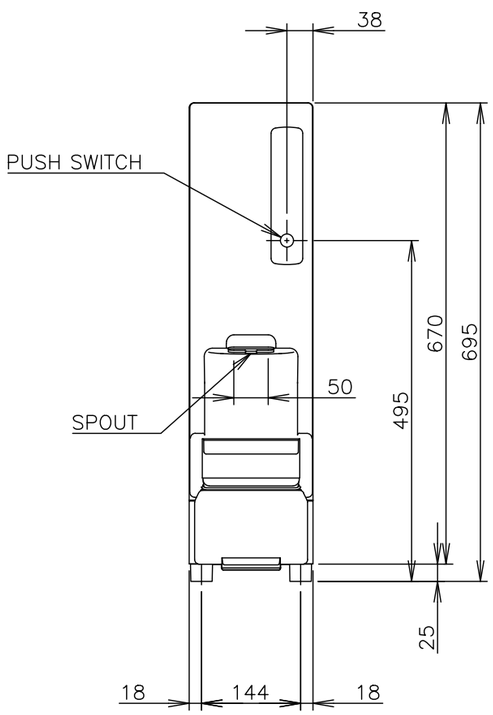
38
PUSH SWITCH
SPOUT
50
670
695
495
25
18
144
18

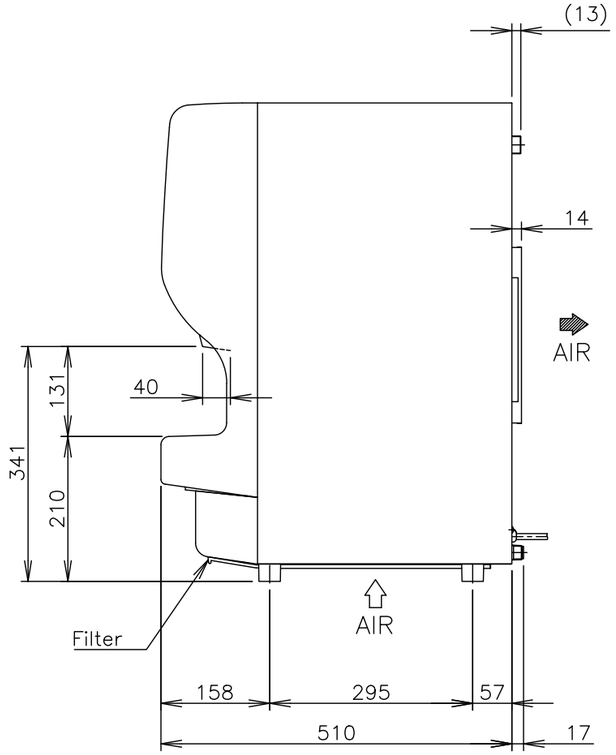
(13)
14
AIR
40
131
341
210
Filter
AIR
158
295
57
510
17

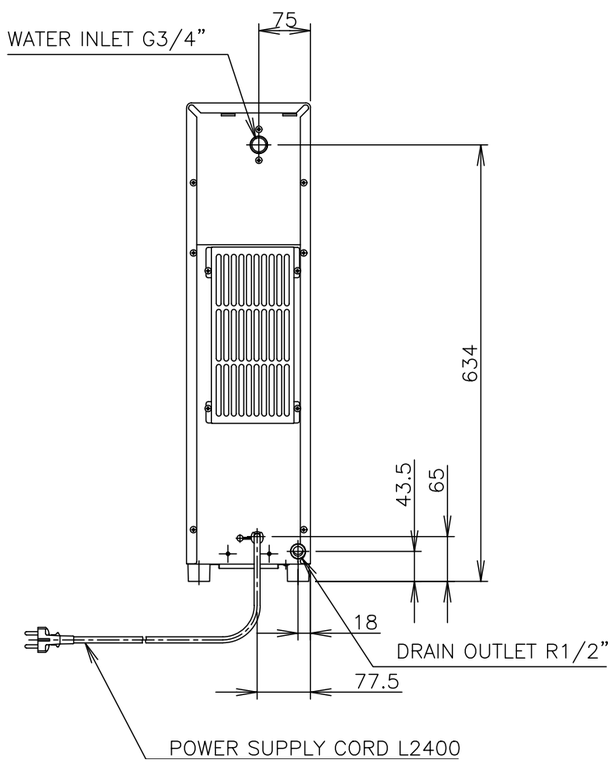
WATER INLET G3/4"
75
634
43.5
65
18
DRAIN OUTLET R1/2"
77.5
POWER SUPPLY CORD L2400