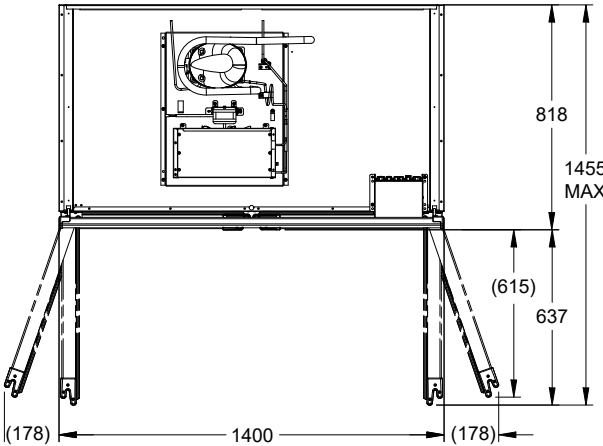
818
1455
MAX
(615)
637
(178)
1400
(178)

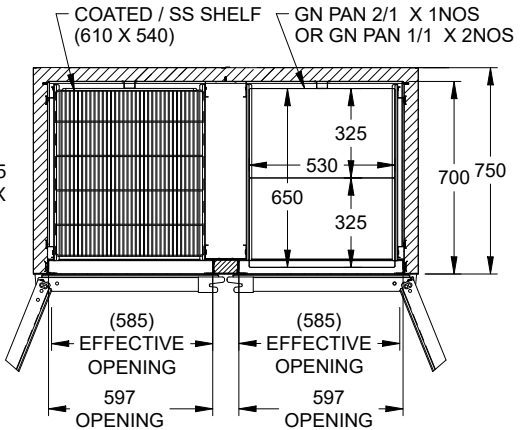
COATED / SS SHELF
(610 X 540)
GN PAN 2/1 X 1NOS
OR GN PAN 1/1 X 2NOS
325
530
650
325
700
750
(585)
EFFECTIVE
OPENING
597
OPENING
(585)
EFFECTIVE
OPENING
597
OPENING

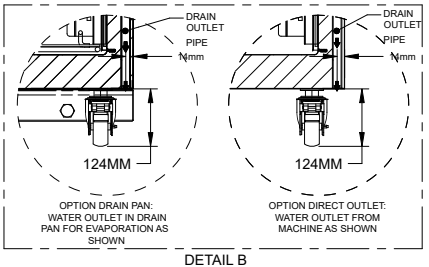
DRAIN
OUTLET
PIPE
Nmm
124MM
OPTION DRAIN PAN:
WATER OUTLET IN DRAIN
PAN FOR EVAPORATION AS
SHOWN
DRAIN
OUTLET
PIPE
Nmm
124MM
OPTION DIRECT OUTLET:
WATER OUTLET FROM
MACHINE AS SHOWN
DETAIL B

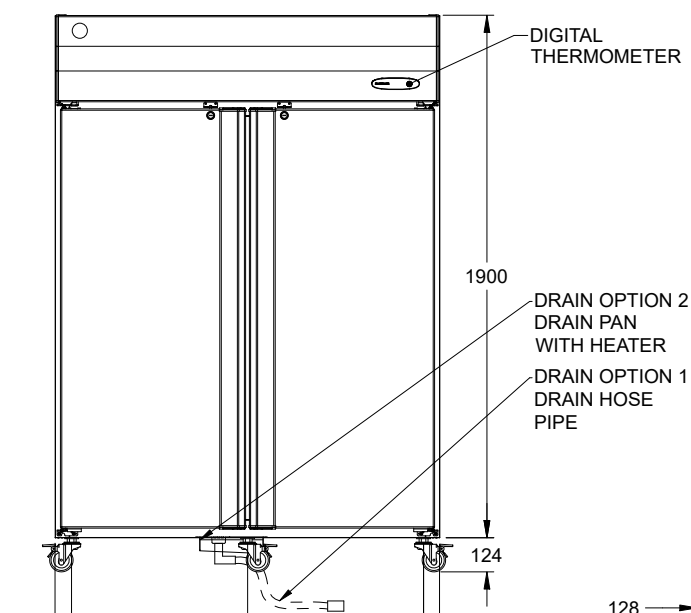
DIGITAL
THERMOMETER
1900
DRAIN OPTION 2
DRAIN PAN
WITH HEATER
DRAIN OPTION 1
DRAIN HOSE
PIPE
124
640
58

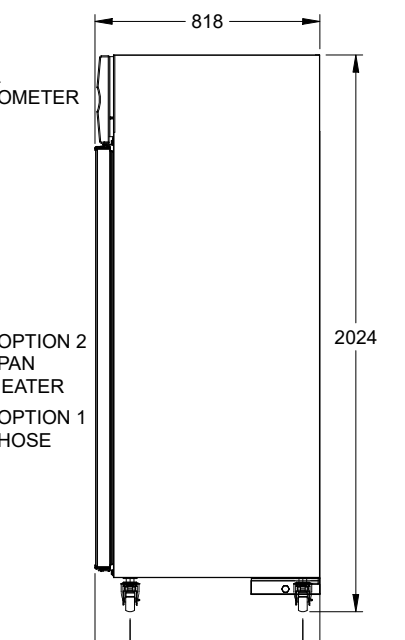
818
2024
128
628
62

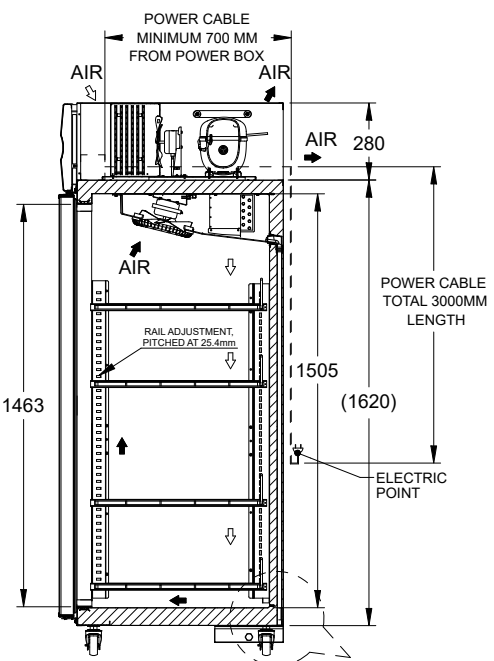
POWER CABLE
MINIMUM 700 MM
FROM POWER BOX
AIR
AIR
AIR
280
AIR
POWER CABLE
TOTAL 3000MM
LENGTH
RAIL ADJUSTMENT,
PITCHED AT 25.4mm
1463
1505
(1620)
ELECTRIC
POINT
DETAIL B